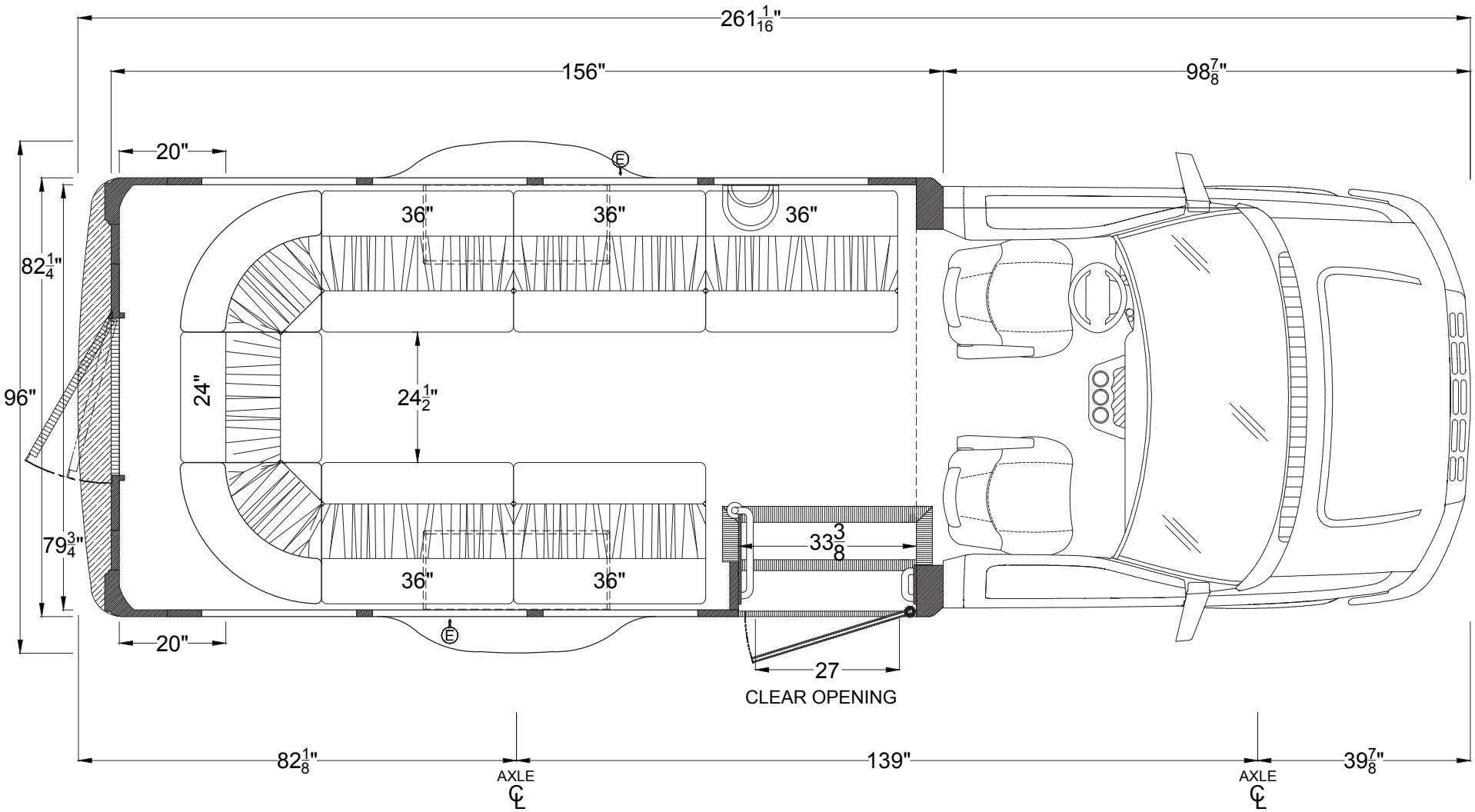

TESCO®
Transportation Equipment Sales Corp.

Proven Quality.
Trusted Name.

800.227.3572 • www.tescobus.com

Turtle Top: Van Terra Executive
15 passenger

TURTLETOP